ARC
Keeper®

AK175PRB
AK250PRB
AK400PRB

HIGH INTENSITY DISCHARGE
BACKUP BALLAST

PHILIPS
bodine

NRTL/C

FOR USE WITH PROBE START LAMPS AND CWA MAGNETIC BALLASTS

INSTALLATION INSTRUCTIONS

! IMPORTANT SAFEGUARDS !

WHEN USING ELECTRICAL EQUIPMENT, BASIC SAFETY PRECAUTIONS SHOULD ALWAYS BE FOLLOWED, INCLUDING THE FOLLOWING:

READ AND FOLLOW ALL SAFETY INSTRUCTIONS

1. To prevent high voltage from being present on red and yellow output leads prior to installation, inverter connector must be open. Join inverter connector after the ARC Keeper has been installed and before the AC power is supplied.
2. The AK175PRB product is only for use with one M57 compatible (175 W or energy savings 150 W) metal halide probe-start lamp that requires no more than a single lamp holder and is operated in conjunction with a standard M57 CWA AC magnetic ballast.
3. The AK250PRB product is only for use with one M58 compatible (250 W or energy savings 225 W) metal halide probe-start lamp that requires no more than a single lamp holder and is operated in conjunction with a standard M58 CWA AC magnetic ballast.
4. The AK400PRB product is only for use with one M59 compatibe (400 W or energy savings 360 W) metal halide probe-start lamp that requires no more than a single lamp holder and is operated in conjunction with a standard M59 CWA AC magnetic ballast.
5. Make sure all connections are in accordance with the National Electrical Code and any local regulations.
6. To reduce the risk of electric shock, disconnect both normal and auxiliary power supplies and inverter connector of the backup ballast before servicing.
7. This backup ballast is for factory or field installation.
8. An AC power source (120 or 277 VAC, 50/60 Hz) ahead of any wall switch is required to provide battery charging current.
9. Do not install near gas or electric heaters.
10. This product is for use with indoor or damp locations where ambient temperature is 0°C to 55°C. Not suitable for wet or hazardous locations.
11. The battery is field replaceable. Contact manufacturer for information on replacements. Use caution when replacing battery. Dispose of battery properly. Do not incinerate.
12. The use of accessory equipment not recommended by the manufacturer may cause an unsafe condition.
13. Do not use this product for other than intended use.
14. Servicing should be performed by qualified service personnel.

SAVE THESE INSTRUCTIONS

Ni - Cd

THIS PRODUCT CONTAINS A RECHARGEABLE NICKEL-CADMIUM BATTERY.
THE BATTERY MUST BE RECYCLED OR DISPOSED OF PROPERLY.

11/18/10
© Philips Emergency Lighting
A Division of Philips Electronics North America Corporation
236 Mt. Pleasant Rd. • Collierville, TN USA 38017-2752 • Tech Support 888-263-4638 • Fax 901-854-1630 • www.philips.com/bodine
70110001

Illustration 1

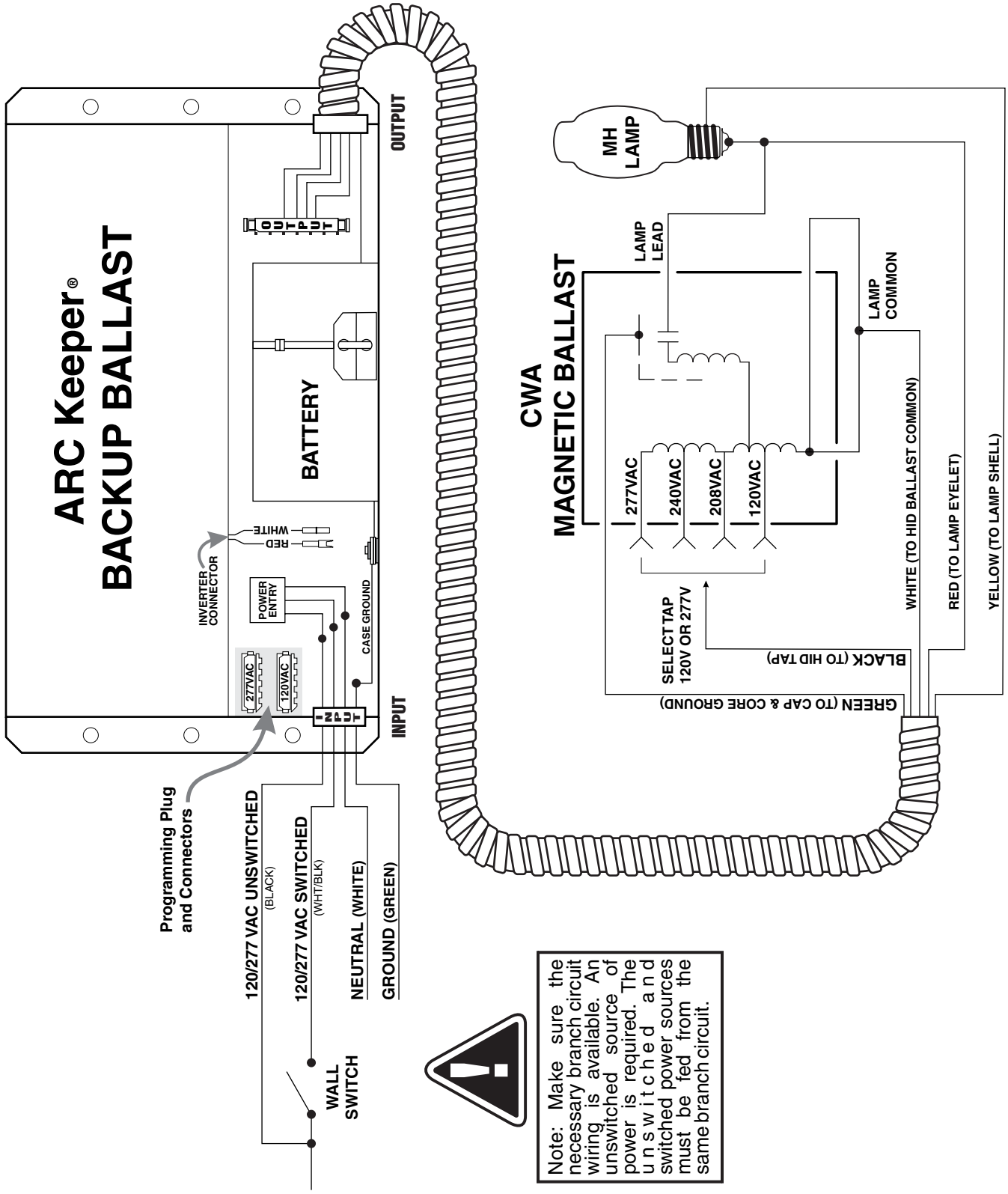

Note: Make sure the necessary branch circuit wiring is available. An unswitched source of power is required. The unswitched and switched power sources must be fed from the same branch circuit.

INSTALLATION

WARNING: TO PREVENT HIGH VOLTAGE FROM BEING PRESENT ON RED & YELLOW OUTPUT LEADS PRIOR TO INSTALLATION, BATTERY CONNECTOR MUST BE OPEN. JOIN INVERTER CONNECTOR AFTER INSTALLATION IS COMPLETE AND BEFORE AC POWER IS SUPPLIED.

NOTE: Make sure that the necessary branch circuit wiring is available. An unswitche source of power is required. The unswitched and switched power source must be fed from the same branch circuit.

INSTALLING THE ARC KEEPER BACKUP BALLAST

> The ARC Keeper backup ballast will be located between the AC power sources and the CWA magnetic ballast as shown in Illustration 1.

> The AC power is fed to the ARC Keeper backup ballast.

> The CWA magnetic ballast receives AC power from the output side of the ARC Keeper backup ballast. Both CWA magnetic ballast and ARC Keeper backup ballast supply power to the metal halide lamp. Identify the output side of the ARC Keeper backup ballast by the presence of the red and yellow leads.

STEP 1 ▶ DISCONNECT AC POWER FROM FIXTURE

> Disconnect power leads from the CWA magnetic ballast.

> Select a suitable location for the ARC Keeper backup ballast and install such that its output leads reach the input leads of the CWA magnetic ballast and the lamp leads.

> See Illustrations 2, 3, and 4 for typical installations and select appropriate mounting method.

Illustration 2

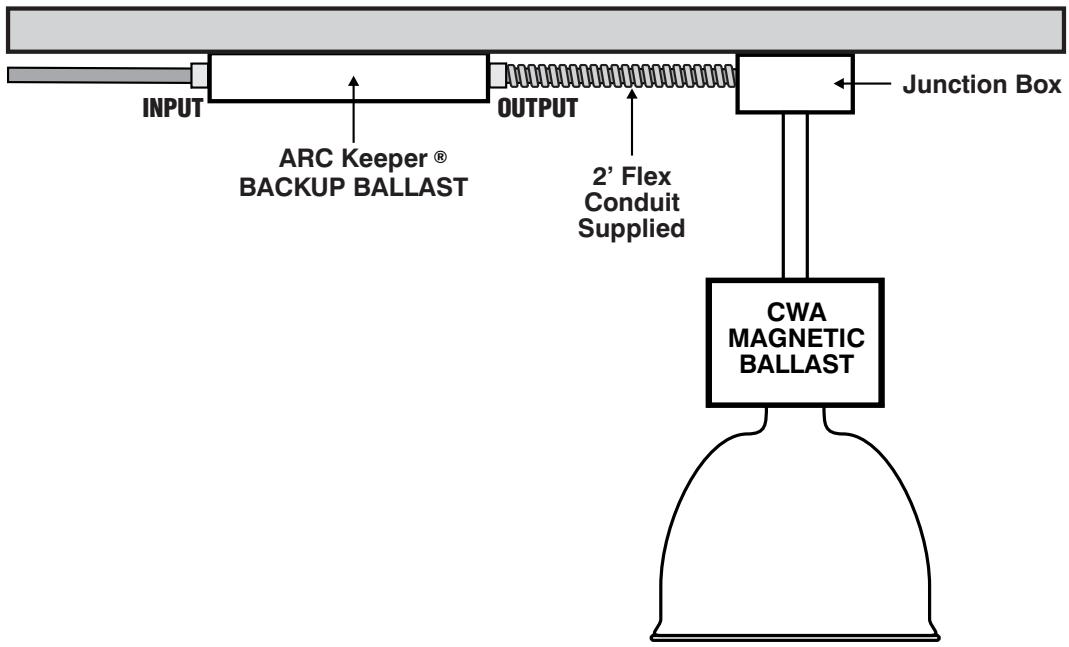

Illustration 3

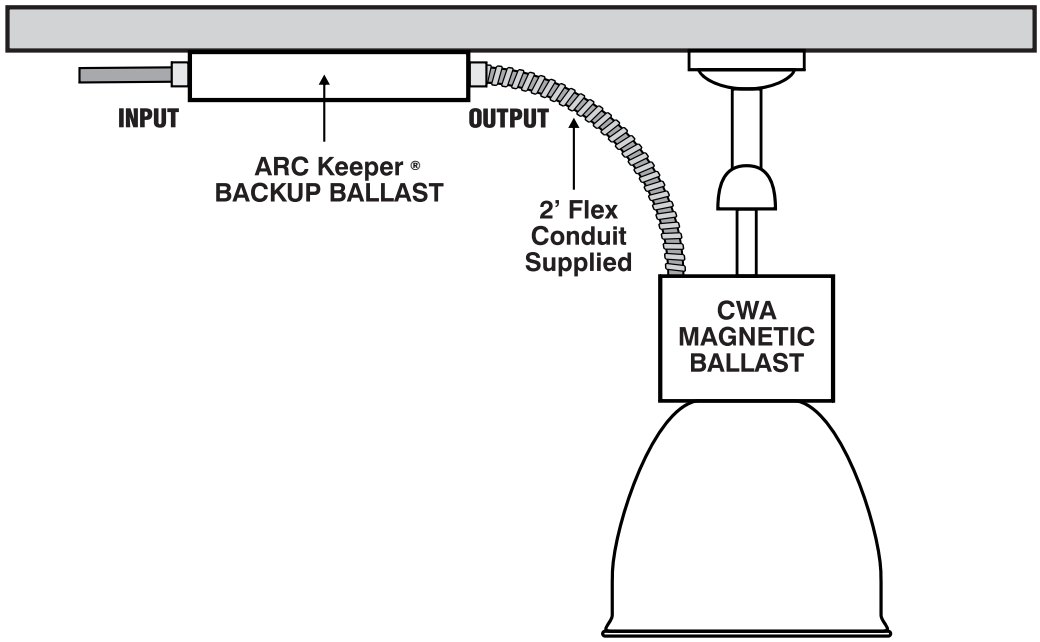

Illustration 4

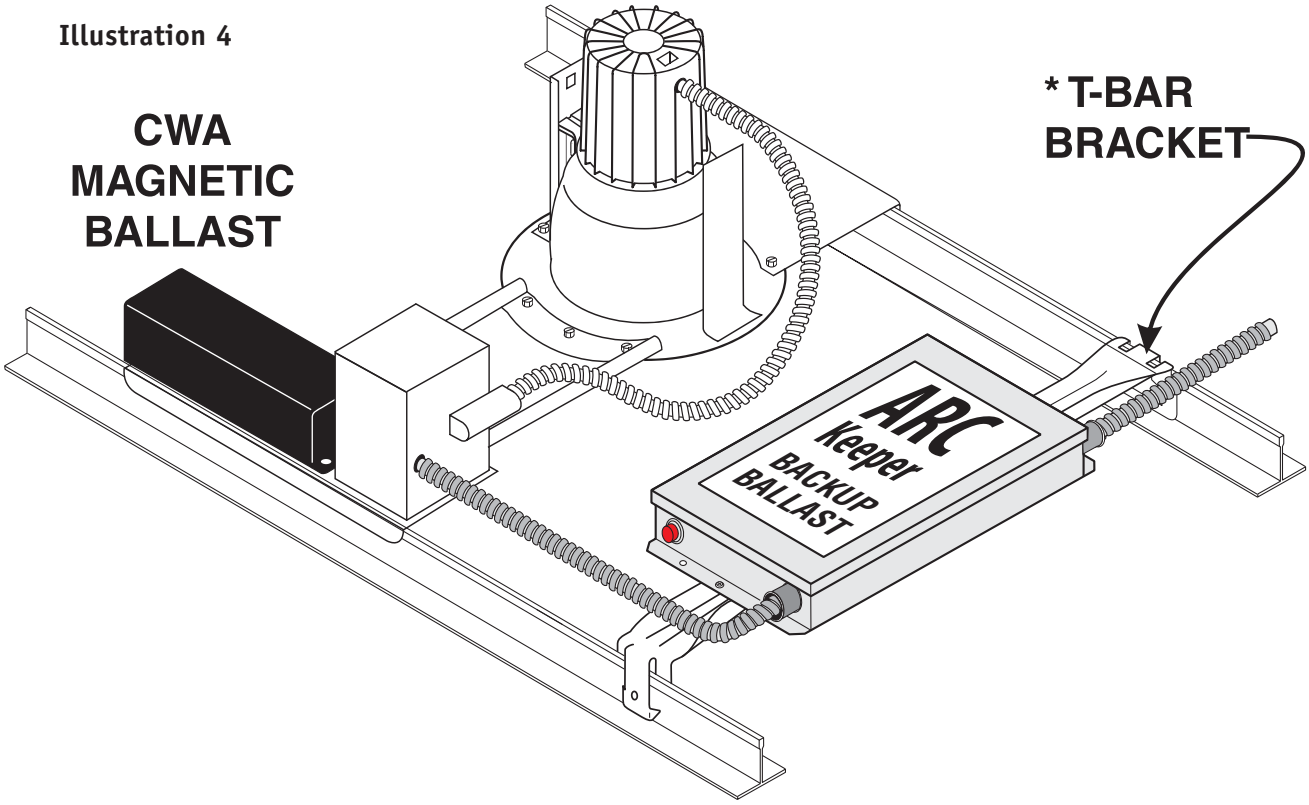

* The T-BAR mounting bracket assembly is sold separately and is available from the factory as an accessory kit (T-BAR-MB). Call your local distributor or the factory for complete information.

STEP 2 ▶ CONNECT THE BACKUP BALLAST TO THE PROPER LINE VOLTAGE

> Remove the lid from the ARC Keeper to expose the input wiring area, the line voltage programming plug, the input power leads, the ground lead, the battery, the inverter connector, and the output connector (see Illustration 5).

> Verify that the inverter connector (red and white) is disconnected. Attach the line voltage programming plug to the connector for the proper voltage of your system - either 120 VAC or 277 VAC.

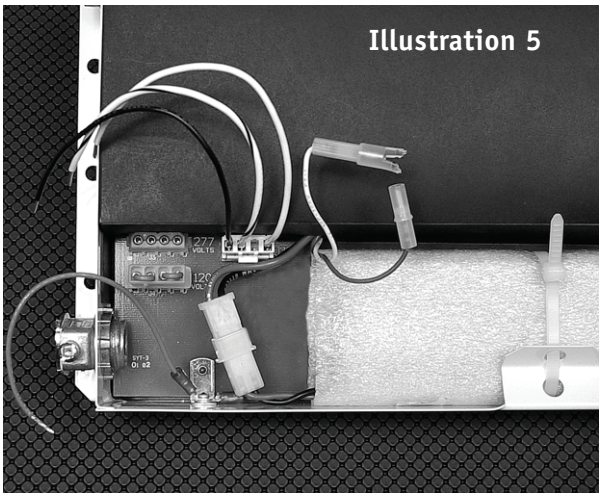

Illustration 5

STEP 3 ▶ WIRING THE BACKUP BALLAST

> Use the wiring diagram found in Illustration 1 as reference.

> Connect the AC power source leads to the input of the ARC Keeper backup ballast.

> Connect the output leads of ARC Keeper backup ballast to the CWA magnetic ballast and the lamp leads. Note that the "lamp common" lead of the CWA magnetic ballast that normally connects to the lamp shell will instead connect to the "white" output lead of the ARC Keeper backup ballast.

> The only lead connecting to the lamp shell will be the "yellow" output lead of the ARC Keeper backup ballast. Make sure all connections are in accordance with the National Electrical Code and any local regulations.

> In a readily visible location, attach the label "CAUTION–This Unit Has More Than One Power Connection Point. To Reduce The Risk Of Electric Shock, Disconnect Both The Branch Circuit-Breakers Or Fuses And DC Power Supply (Backup Ballast Inverter Connector) Before Servicing."

STEP 4 ▶ JOIN THE INVERTER CONNECTOR & APPLY POWER

> After installation is complete, join the inverter connector (see Illustration 6). Replace the lid and apply AC power.

> A short-term discharge test may be conducted after the ARC Keeper backup ballast has been charging for 5 hours. Before performing any test, make sure that the CWA magnetic ballast has operated the lamp for at least 5 minutes. A short-term discharge test is conducted by momentarily disconnecting the circuit breaker(s) so both switched and unswitched AC power are removed for no more than 20 seconds.

> After reapplying AC power, lamps protected with the ARC Keeper backup ballast will continue to operate normally. Lamps NOT protected with the Arc Keeper will have extinguished.

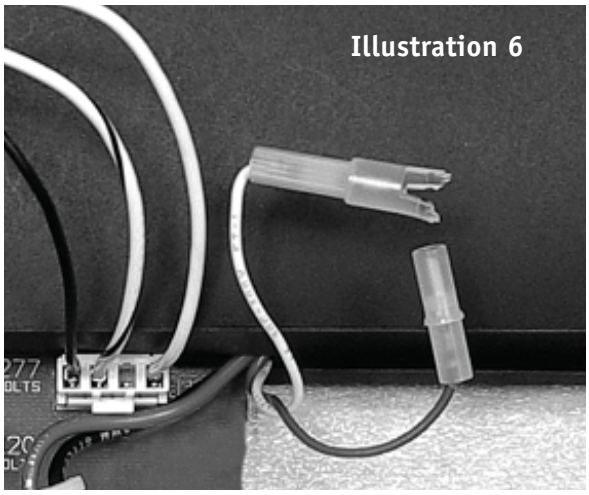

Illustration 6

OPERATION

The ARC Keeper is a battery operated inverter-ballast that catches and maintains the arc in a metal halide lamp during sags, interruptions, or failure of the AC power for up to two minutes. The ARC Keeper backup ballast will apply high frequency power directly to the lamp to supplement the low frequency 50/60 Hz power normally supplied to the lamp by the CWA magnetic ballast. The ARC Keeper backup ballast may be used with or without an auxiliary generator. If not used with an auxiliary generator, the ARC Keeper will serve to support and keep the lamp arc from extinguishing during power line interruptions for up to 2 minutes. If used with an auxiliary generator, the ARC Keeper's two-minute time limit allows more than ample time for an auxiliary generator to come on and support the metal halide lamp for emergency lighting purposes. See Illustration 7 for typical installation of the ARC Keeper when used with an auxiliary generator. Upon initial installation, or after a deep discharge of the battery, the ARC Keeper will need to be recharged before it can be expected to maintain the lamp arc for any significant length of time. The ARC Keeper should be allowed to recharge for a full 24 hours to ensure maximum battery capacity.

Illustration 7

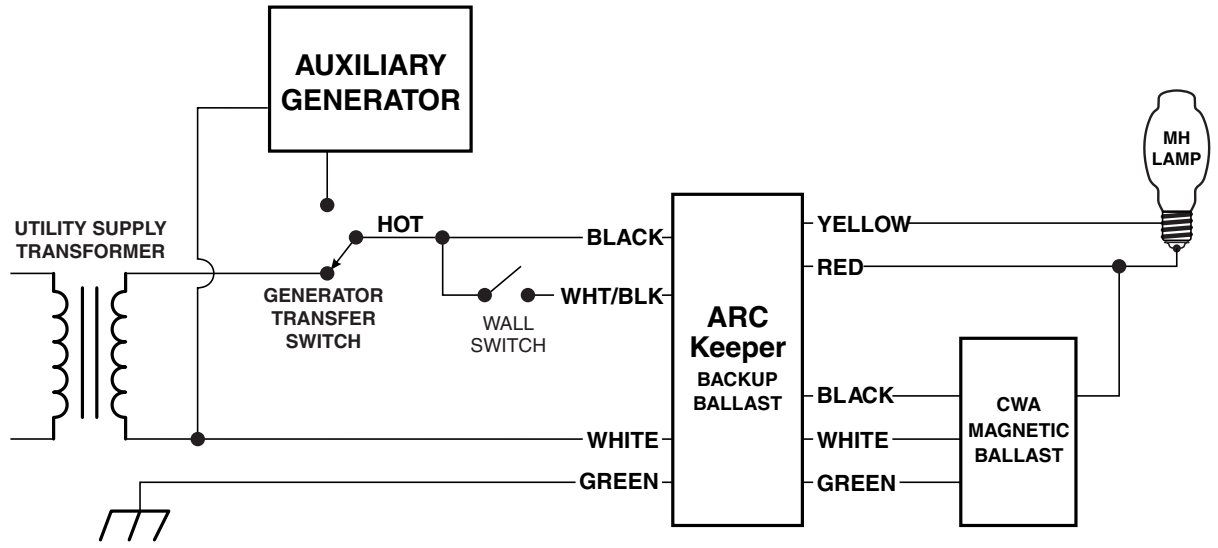

During day-to-day normal operation, the ARC Keeper will not try to maintain the lamp arc immediately when the lamp is first turned on; rather, there will be a 5-minute delay before ARC Keeper will attempt to "catch" the arc. This delay allows the lamp to warm-up each time it is turned on from a cold start. If the wall switch is turned off, in order to turn the lamp off, ARC Keeper will initially catch the lamp arc, but will, after a short delay, recognize that switched power has been turned off and unswitched power is still applied. The ARC Keeper device will release control of the lamp arc and allow the lamp to turn off as intended, then return to battery-charging mode.

MAINTENANCE

Although no routine maintenance is required to keep the backup ballast functional, it should be checked periodically to ensure that it is working.

Perform a short-term discharge test once every 30 days.

! REFER ANY SERVICING INDICATED BY THESE CHECKS TO QUALIFIED PERSONNEL !